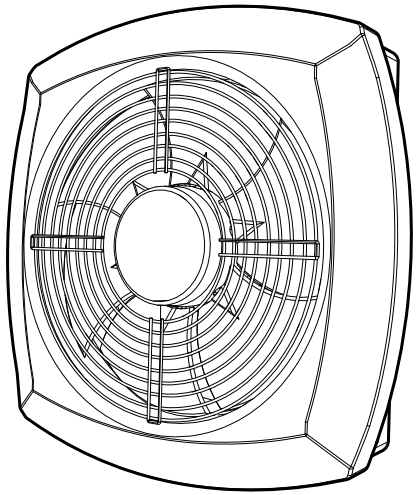

MERA250

Wall Mounted Axial Fan

VES Andover Ltd Eagle Close Chandlers Ford Ind. Est Eastleigh Hampshire SO53 4NF
Tel: 08448 15 60 60 Fax: 02380 261204 e-mail: vesltd@ves.co.uk web: www.ves.co.uk

Original Instructions : Installation, Operation & Maintenance Manual

IMPORTANT

This manual must be read in full before Installation, Operation and Maintenance of the units supplied. Please ensure that this document is passed to the end user. This manual forms an integral part of the product and should be kept for the working life of the product. Additional copies of this and supporting documents are available by contacting VES or by visiting www.ves.co.uk and following the 'Download O & M's' link.

The following symbols used within this document refer to potential dangers or advice for safe operation

Indicates hazards associated with electric current and high voltages

Indicates hazards that require safety advice for personnel and/or potential unit/property damage

Indicates important information

Unit Description

The MERA250 wall mounted axial fan is suitable for a range of light commercial applications including; shops, sports halls, warehouses. This fan is reversible and can operate in extract or supply modes. Mode selection is achieved via the pull cord switch. For full unit details please see the unit specification later in the document.

Immediately upon receipt of your MERA250 fan, check there is no damage to the fan, and that the four fixing screws and matching wall plugs are included within the ancillary bag.
In the event of any damage having occurred or if any item is found to be missing, it is essential to inform VES Andover Ltd. within 7 days of delivery quoting sales order number and the unit type. After this period, VES would be unable to accept any claim for damaged or missing goods.

Part Number	Description
MERA250.....	Wall mounted reversible axial fan, c/w fan blade auto shutter system

IMPORTANT

Before attempting to carry out any work on our units, all accompanying documentation including warning labels on the unit must be referenced. Should it be necessary to remove any component ensure that these are secured into position once reinstalled. It is critical that after any maintenance work has been conducted that all components removed /replaced be refitted correctly by a competent engineer.

Original Instructions : Installation, Operation & Maintenance Manual

IMPORTANT

MERA250 fans should be installed in accordance with current IEE Regulations BS7671 and the appropriate Building Regulations.

IMPORTANT

For fan positioning refer to Building Regulation for specific requirements. If installed in a room containing a fuel burning device without a balanced flue, it is the installers responsibility to ensure that is enough replacement air to prevent any fumes being drawn back down the flue when the fan is operating at full speed. These fans are not suitable for ceiling mounting. The fan should be installed with an appropriate duct kit and consideration must be given to ensure that access to all moving parts of the fan are restricted when the fan is in use.

MERA250
Dimension drawings

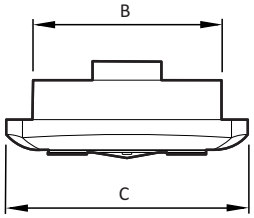

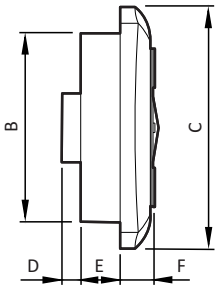

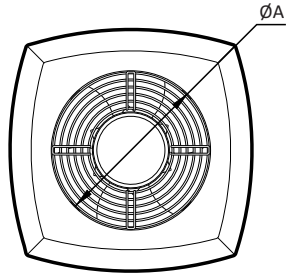

Dimensions (mm)	ØA	B	C	D	E	F
MERA250	252	285	350	24	50	46

Specification

Power Supply	230VAC 50Hz
Operating Temperature	0~40°C
Speed (rpm)	1420
Power (W)	36
Current (A)	0.15
Insulation Class	1
Motor Protection	IP rated to X2
Motor Type	Bearing

IMPORTANT

Before attempting to carry out any maintenance or repair work on our units, the unit MUST BE COMPLETELY ISOLATED from its electrical supply. Ensure a minimum of two minutes after electrical disconnection before attempting access. This will allow any moving parts to come to a rest.

Maintenance

1. Before cleaning, isolate the fan completely from the mains supply.
2. Carefully remove the front cover
3. To clean the front cover, either wipe it with a damp, lint free cloth or wash it in warm soapy water. Thoroughly dry the front cover and refit.
4. Do not immerse the fan in water or other liquids to clean any other parts of the fan.
5. Never use strong solvents to clean the fan.
6. Apart from cleaning, no other maintenance is required.

For replacement fans or install kits please visit **www.vesdirect.co.uk**

Warranty

The fan is guaranteed against defects for 1 year from the date of purchase. If you have any problems, contact VES at the address shown below.

WEEE Directive

Atthe end oftheir useful life the packaging and product should be disposed of via a suitable recycling centre. Do not dispose of with normal household waste. Do not burn.

Standards

MERA fans conform to all relevant British and European standards and directives. Further information is available from VES Andover Ltd on request

Please ensure thatthis documentis passed on to the end user

We reserve the right to alter the specification without notice
©VES Andover Ltd. 2010. No part of this publication may be photocopied or otherwise reproduced without the prior permission in writing of VES Andover Ltd.

Q 05375

VES Andover Ltd Eagle Close Chandlers Ford Ind. Est Eastleigh Hampshire SO53 4NF
Tel: 08448 15 60 60 Fax: 02380 261204 e-mail: vesltd@ves.co.uk web: www.ves.co.uk

Original Instructions : Installation, Operation & Maintenance Manual

Installation continued

1. Remove the front cover from the fan by hand - tools not required

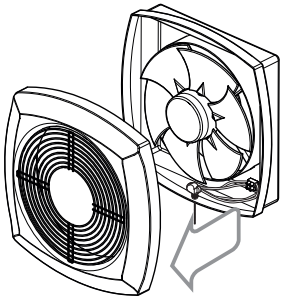

2. Using the fan chasis as a template, mark centre holes on mounting surface

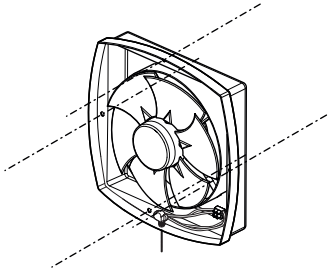

3. Prepare hole in mounting surface & plug mounting holes as required

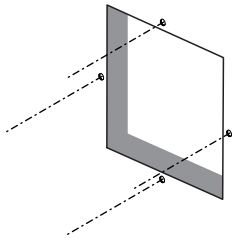

4. Secure fan body mounting surface

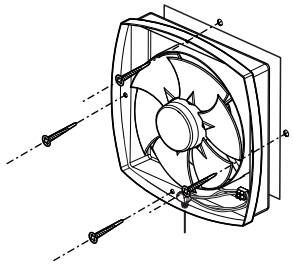

5. Wire the fan as per wiring diagram & instructions

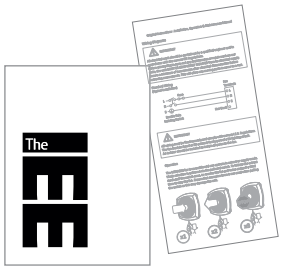

6. Replace snap on front cover

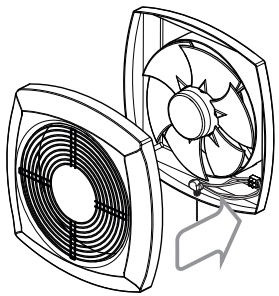

Original Instructions : Installation, Operation & Maintenance Manual

Wiring Diagrams

IMPORTANT

All electrical work should be carried out by a qualified engineer and in accordance with the current IEE Regulations.
Before attempting to carry out any maintenance or repair work on our units, the unit MUST BE COMPLETELY ISOLATED from its electrical supply. Ensure a minimum of two minutes after electrical disconnection before attempting access. This will allow any moving parts to come to a rest.

Standard Wiring
(Typical Installation)

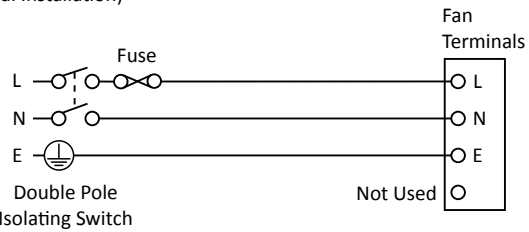

IMPORTANT

The fan must be fused at 3A unless it forms part of a 5A lighting circuit.
An isolator should be installed to isolate all poles to the fan. Please note the integral pull cord switch does not isolate the fan from the electrical supply.

Operation
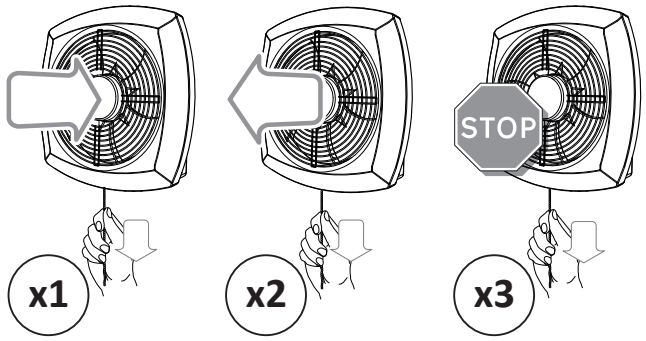
The MERA250 fan is reversible and can operate in extract or supply mode. Mode selection is achieved via the pull cord switch. To initiate the extract mode pull the switch once, to reverse the fan pull twice, and pull a third time to stop the fan. Ensure that excessive force is not used when pulling the switch as this may damage the unit.